Saf-Tainer

"Protect your company against hazardous IBC spills with the portable, cost effective protection of Saf-Tainer" It's the most cost effective system on the market today. The unique polyethylene design reduces the risk of unrecoverable spills and protects the environment. It's economical price and versatile design saves you money while safely addressing your company's ever-changing environmental concerns.

Drain Plug allows easy emptying and cleaning.

Forklift Channels make Saf-Tainer easy to move and stack.

Benefits:

- Meets 40 CFR 264.175 which satisfies containment regulations
- 100% polyethylene construction which offers superior corrosion and chemical resistance.
- 8000 lb. static load capacity which allows it to handle heavier loads
- Sump with drain plug making it easy to drain and clean
- Portable and lightweight allows you to move Saf-Tainer where it's needed

Saf-Tainer is compatible with all poly IBCs

8000 lb static load capacity allows stacked discharge arrangements

Optional top grating makes Saf-Tainer compatible with all IBCs, including metal

Internal platform can also be used as IBC stand

HD EQUIPAMENTOS®

Rod. Anhanguera, Km 33
Pq. Empresarial Anhanguera • Cajamar, SP 07750-000

Fone:(11) **3531**.6199
Fax: (11) 3531.6198
email: hd@hd.ind.br
site: www.hd.ind.br

Saf-Tainer's economical price *and versatile design saves you money while safely addressing your company's ever-changing environmental concerns.*

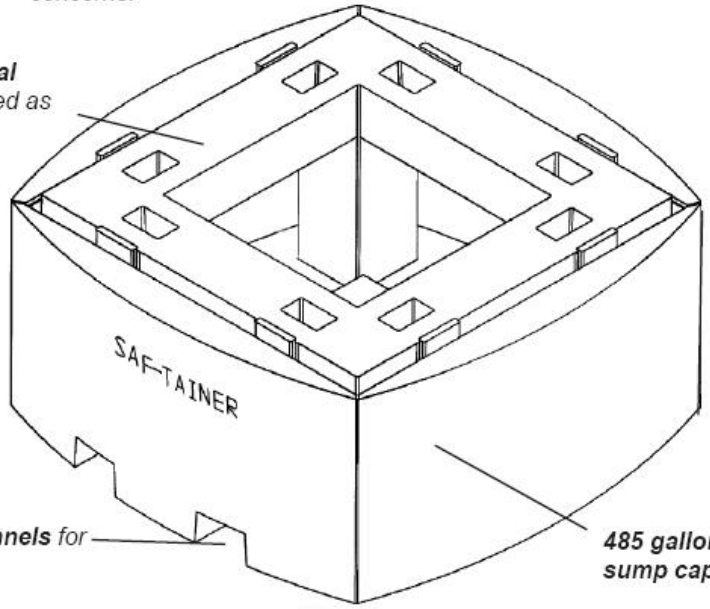

Removable internal *platform can be used as an IBC stand.*

Forklift channels *for portability.*

485 gallon sump capacity.

FRP grating *may be required with metal IBCs.*

Component	Dimensions	Weight	Loading Bearing Capacity	Liquid Capacity
Basin	L= 66" W=66" H=29 1/2"	92 lbs.		500 Gallons
Stand	L=52" w=52" H=30"	190 lbs.	8,000 lb. load	
Stand/Basin	L=66" w=66" H=30"	282 lbs.	8,000 lb. load	485 Gallons

EQUIPAMENTOS®

Rod. Anhanguera, Km 33
Pq. Empresarial Anhanguera • Cajamar, SP 07750-000

Fone:(11) **3531**.6199
Fax: (11) 3531.6198
email: hd@hd.ind.br
site: www.hd.ind.br

SPIL-TAINER™

line of drum containments meet or exceed all regulations for secondary containment.

Spil-tainers are specially designed to contain spills and leaks from 55 gallon drums. They effectively contain drops and spills from drum filling operations and/or spills and leakage during in-plant transport and storage.

They help protect personnel, work areas, soil and ground water when containing regulated liquids. All units meet or exceed all EPA and regulatory requirements for secondary containment.

- Molded entirely out of chemical and impact resistant polyethylene.
- Reinforced design and one-piece seamless construction provides long lasting, heavy duty usage.
- Molded-in locator ring on bottom interior ensures seating of drums.
- Extra-high wall for maximum containment.
- Ultra-smooth surfaces for easy cleaning.

One Drum Unit

Two Drum Unit

Four Drum Unit

NG • SOLUTIONS IN BULK HANDLING • SOLUTIONS IN BULK HANDLING • SOLUTIONS IN BULK HANDLING • SOLUTIONS IN BULK HANDLING •

HD EQUIPAMENTOS®

Rod. Anhanguera, Km 33
Pq. Empresarial Anhanguera • Cajamar, SP 07750-000

Fone:(11) **3531**.6199
Fax: (11) 3531.6198
email: hd@hd.ind.br
site: www.hd.ind.br

Specifications

OPTIONAL COVERS

Spil-tainers are available with an optional molded poly cover. The cover protects against the elements if stored outside, or dust and debris if stored in plant.

Item No. and Description	Load Capacity Lbs.	Dimensions OD x Height Inches	Weight Lbs.
6270100T88701-- (1 drum) 6280100T88701-- (cover)	900 Cover	30.25 x 26 30.25 x 26	28 12
6270200T88701-- (2 drum) 6280200T88701-- (cover)	1800 Cover	56 x 30 x 24 56 x 30 x 24	45 30
6270300T88701-- (4 drum) 6280300T88701 - (cover) Requires pallet for movement.	3600 Cover	50.5 x 50.5 x 17.5 53.3 x 53.5 x 20.5	50 45

EQUIPAMENTOS®

Rod. Anhanguera, Km 33
Pq. Empresarial Anhanguera • Cajamar, SP 07750-000

Fone:(11) **3531**.6199
Fax: (11) 3531.6198
email: hd@hd.ind.br
site: www.hd.ind.br